SPECIFICATION

Customer Name					
Customer No.					
Product Description			Photo Interrupter		
Product Model			ORTR-645S		
Orient Confirm			Customer Confirm		
Approved by	Checked by	Prepared by	Approved by	Quality	Engineering
Chenjunyuan	Linshixiu	Zhengdagui			
Judge outcome：		OK	Judge outcome：		

Add：Block A 3rd Floor No.4 Building Tian An Cyber Park Huang Ge Rd, Long Gang Dist, Shenzhen, GD
TEL：0755-29681816 URL：www.orient-opto.com

Copyright© 2025 Orient Corporation.

1、Features

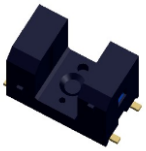

- Fast response time.
- High sensitivity.
- Thin and small package.
- Pb free.
- This product itself will remain within RoHS compliant version.
- Compliance with EU REACH.

2、Applications

- Printer.
- Copier.
- Scanner.
- Opto-electronic switch.

3、Description

- The ORTR-645S consists of an infrared light emitting diode and a silicon phototransistor encased in a black thermo-plastic housing.
- Phototransistor receives radiation from the IR LED only, and avoids the noise from ambientlight.

Copyright© 2025 Orient Corporation.

4、Package Outline Dimensions

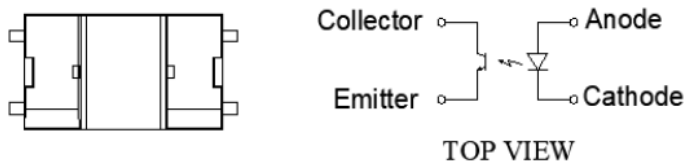

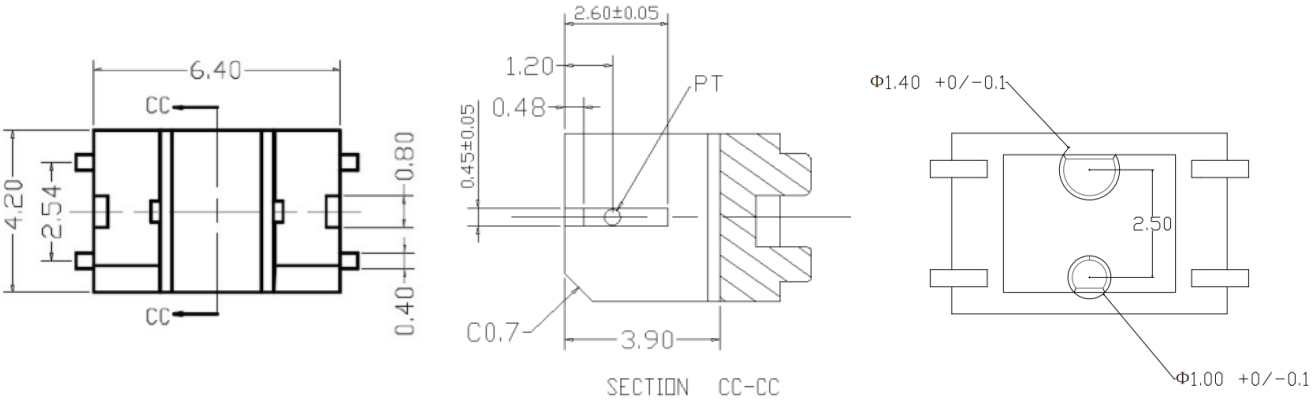

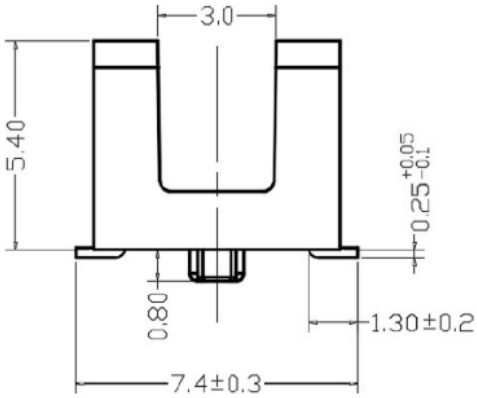

Unit: mm

Notes:

1). All dimensions are in millimeters.

2). Tolerance is ± 0.20mm unless otherwise specified.

3). Specifications are subject to change without notice.

5、Absolute maximum ratings at Ta=25℃

Parameter		Symbol	Rating	Unit
Input	Power Dissipation	P_D	65	mW
	Forward Current	I_F	50	mA
	Reverse Voltage	V_R	5	V
Output	Collector Power Dissipation	P_C	75	mW
	Collector Current	I_C	20	mA
	C-E Voltage	V_{CEO}	30	V
	E-C Voltage	V_{ECO}	5	V
Operating Temperature Range		T_{opr}	-30~+85	℃
Storage Temperature Range		T_{stg}	-40~+85	℃
Soldering Temperature *1 （3mm from the package）		T_{sld}	260	℃

Notes: *1 Soldering time≦5 seconds.

6、Electrical-optical characteristics at Ta=25℃

Parameter		Symbol	Condition	Min.	Typ.	Max.	Unit
Input	Forward Voltage	V_F	I_F=20mA	-	1.27	1.6	V
	Reverse Current	I_R	V_R=5V	-	-	10	uA
	Peak Wave Length	λ_P	I_F=20mA	-	940	-	nm
Output	Collector Dark Current	I_{CEO}	V_{CE}=20V Ee=0mW/cm^2	-	-	100	nA
	C-E Saturation Voltage	$V_{CE(sat)}$	I_C=2mA Ee=1mW/cm^2	-	-	0.4	V
Transfer Characteristics	On State Collector Current	I_C(on)	V_{CE}=5V I_F=20mA	0.2	-	6.0	mA
	Rise Time	t_r	V_{CC}=5V I_C=1mA R_L=1K	-	15	-	us
	Fall Time	t_f		-	15	-	us

Copyright© 2025 Orient Corporation.

7、Typical optical characteristics curves

Forward Current vs. Forward Voltage

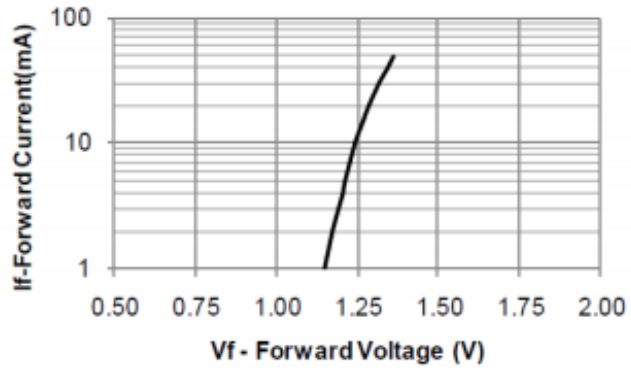

Peak Wavelength vs. Ambient Temperature

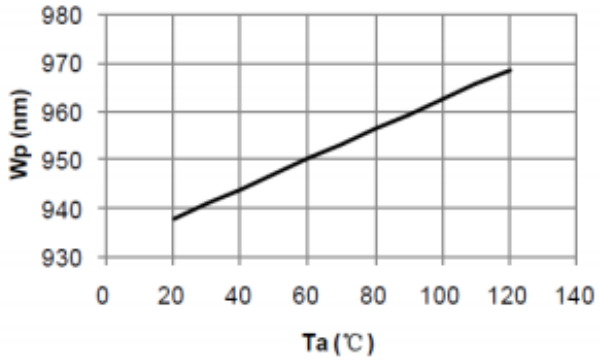

Relative Intensity vs. Ambient Temperature

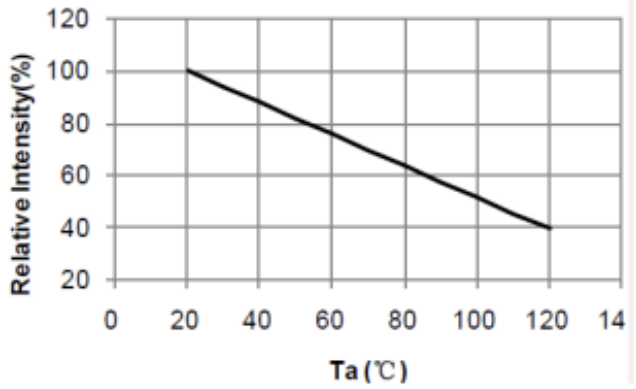

Forward Voltage vs. Ambient Temperature

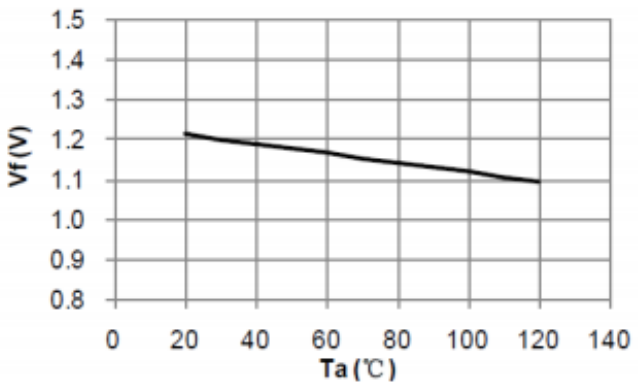

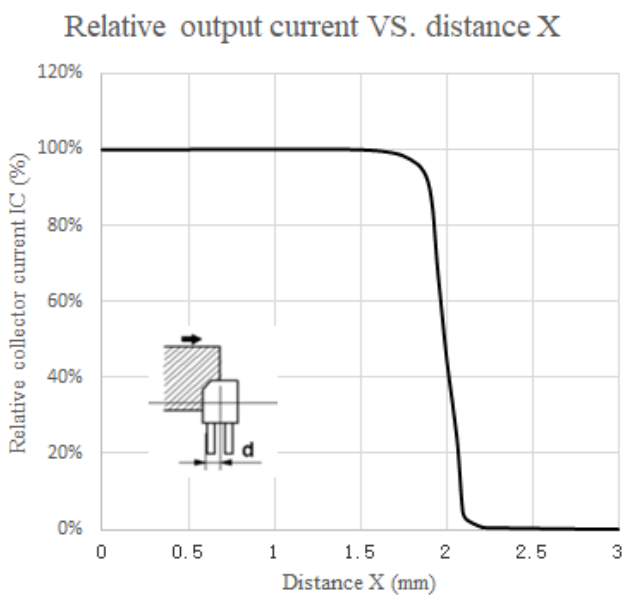
Relative output current VS. distance X
120%
100%
80%
60%
40%
20%
0%
Relative collector current IC (%)
0
0.5
1
1.5
2
2.5
3
Distance X (mm)
d

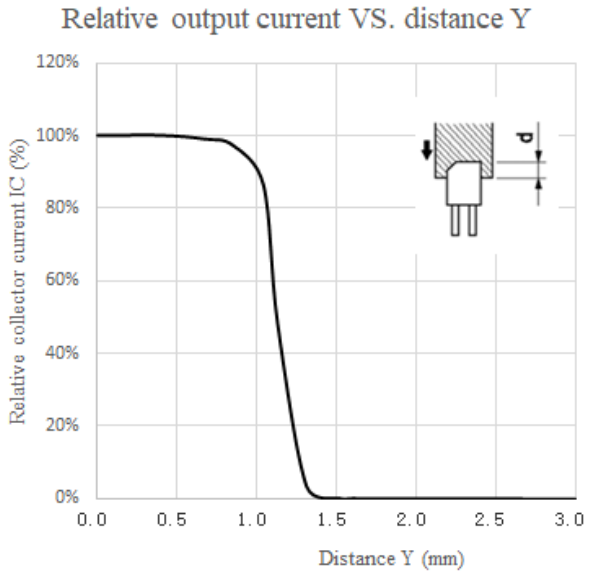
Relative output current VS. distance Y
120%
100%
80%
60%
40%
20%
0%
Relative collector current IC (%)
0.0
0.5
1.0
1.5
2.0
2.5
3.0
Distance Y (mm)
d

8、Package and Label of Products

Package:

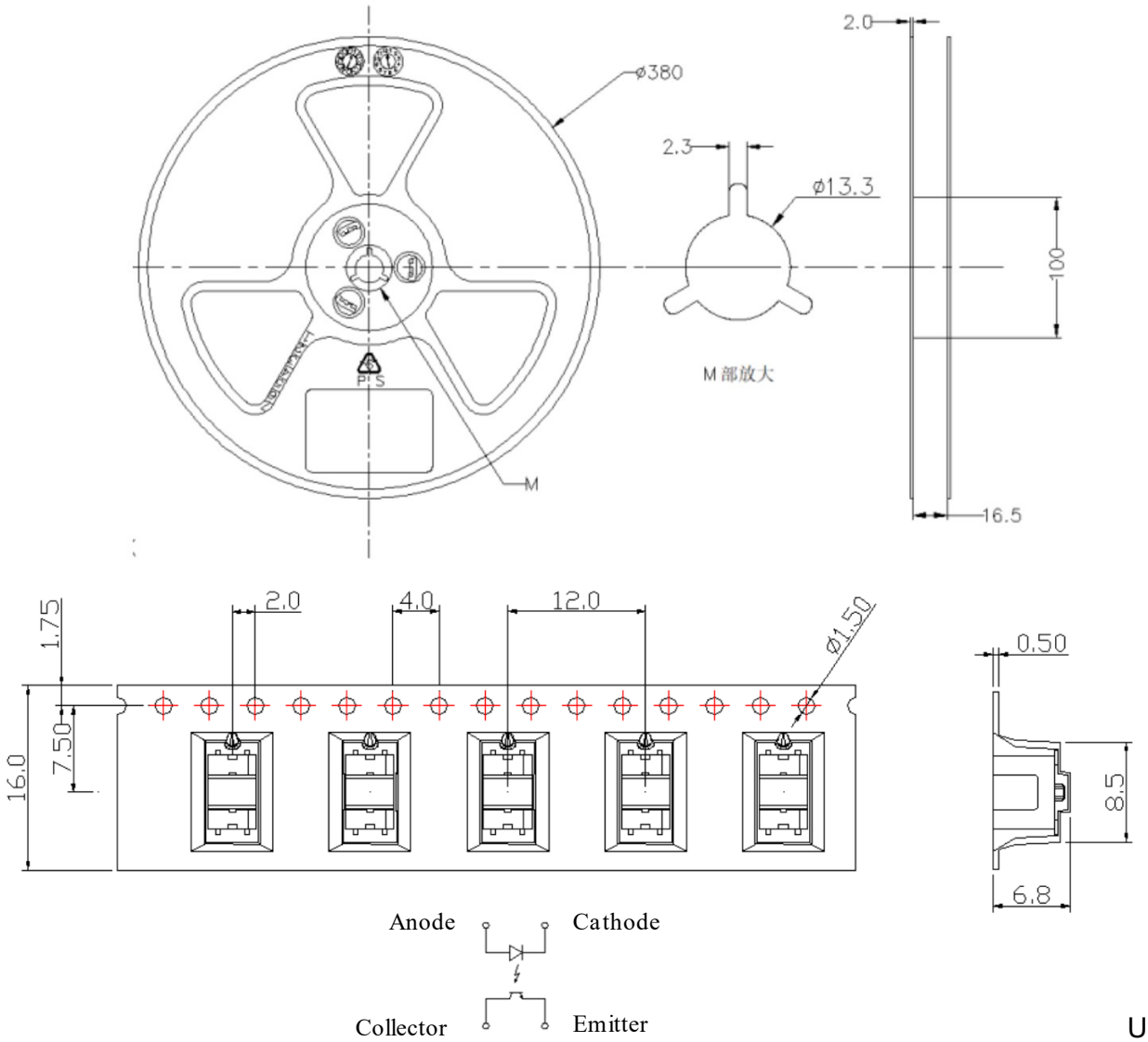

Unit:mm

Notes:

1、All dimensions are in mm, tolerance is±0.1mm unless otherwise noted.

2、Specifications are subject to change without notice.

3、Loaded quantity: 1,200 pcs/reel.

Label:

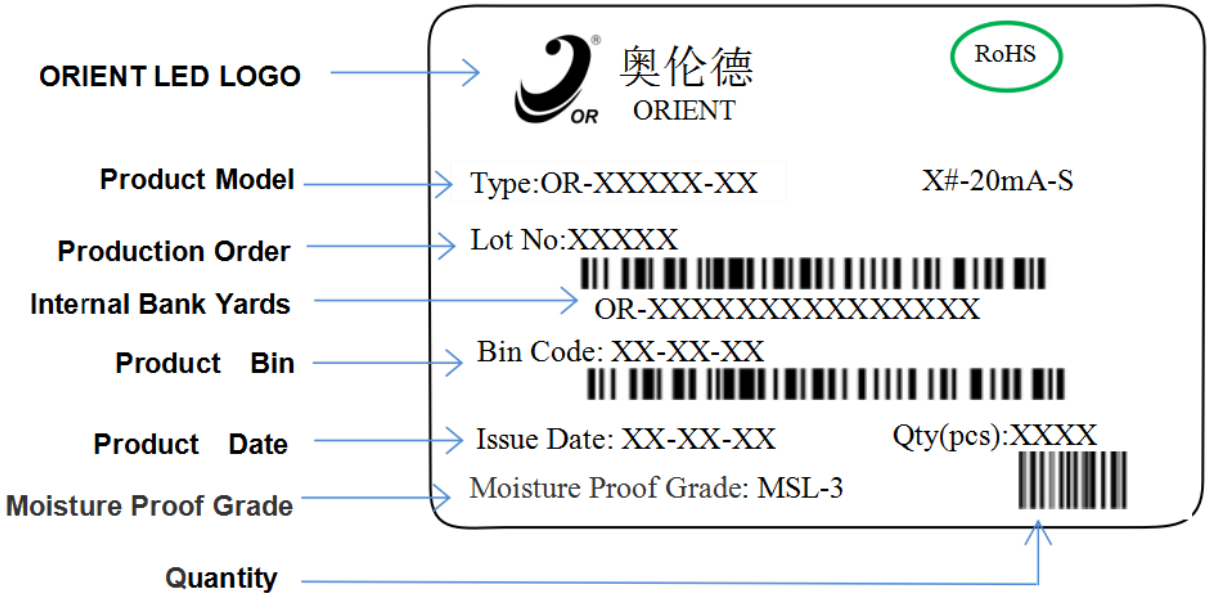
ORIENT LED LOGO
Product Model
Production Order
Internal Bank Yards
Product Bin
Product Date
Moisture Proof Grade
Quantity
奥伦德
ORIENT
RoHS
Type:OR-XXXXX-XX
X#-20mA-S
Lot No:XXXXX
OR-XXXXXXXXXXXXXXX
Bin Code: XX-XX-XX
Issue Date: XX-XX-XX
Qty(pcs):XXXX
Moisture Proof Grade: MSL-3

9、Precautions for use

1、Soldering

Do not use hot plate to mount the package at the peak temperature (Tp) of 260°C over 5 seconds.

Recommended soldering conditions:

Profile Feature	Pb-Free Assembly
Preheat Temperature min (Tsmin) Temperature max (Tsmax) Time (Tsmin to Tsmax) (ts)	150℃ 200℃ 60-120 seconds
Average ramp-up rate (Tsmax to Tp)	3 °C/second max
Liquidous temperature (TL) Time at liquidous (tL)	217 °C 60-150 seconds
Peak package body temperature (Tp)	255 °C ~260 °C
Classification temperature (Tc)	260 °C
Average ramp-down rate (Tp to Tsmax)	6°C/second max.
Time 25 °C to peak temperature	8 minutes max.

The following reflow profile is from IPC/JEDEC J-STD-020D which provided here for reference.

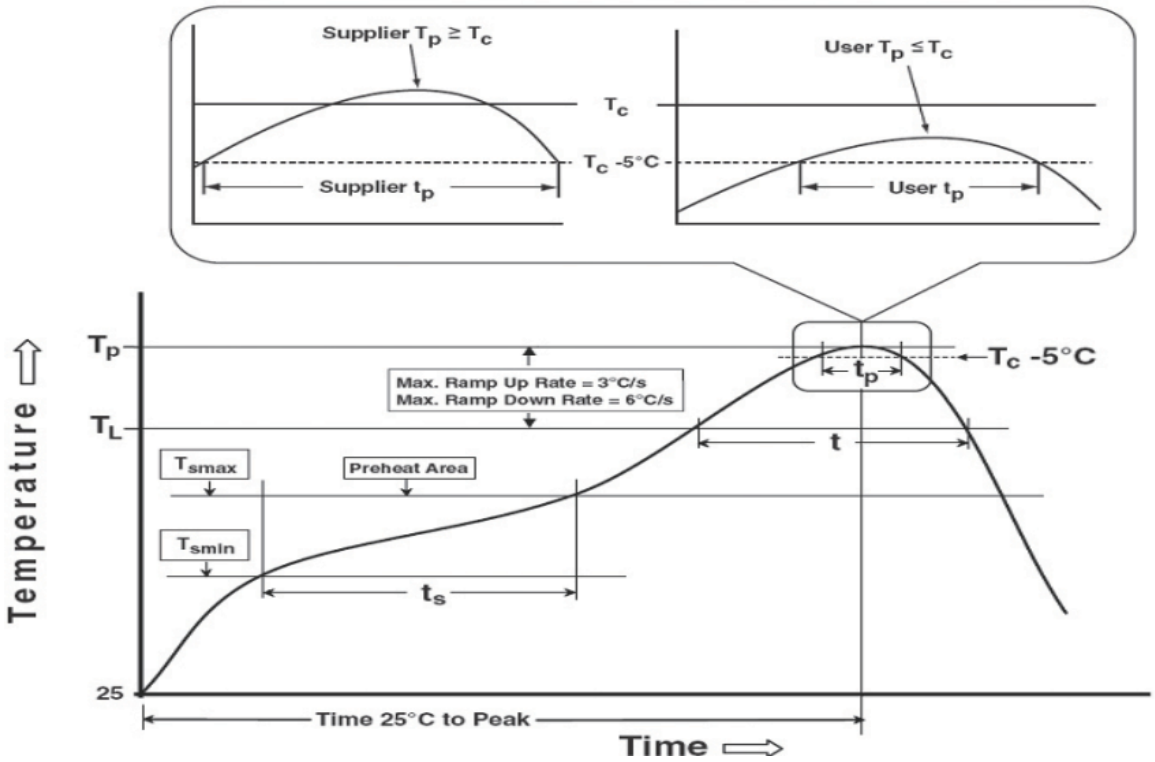

2、Cleaning

2.1. Don't be cleaned with ultrasonic. Recommended to be wiped with isopropyl alcohol or pure alcohol, wiping time should not be more than one minute. LED must be placed at room temperature for fifteen minutes before using. After cleaning, you must insure clean on the radiant surface. Otherwise, foreign objects can affect radiant color.

2.2. LED can not be in contact with isoamyl acetate, trichloroethylene, acetone,sulfide, nitride, acid, alkali, salt. These matter can destroy LED.

3、Sealing

3.1. Sealing glue can not contain sodium ion, sulfide, because these matter can affect fluorescence powder poisoning.

3.2. When using normal sealing glue, Recommended to be operated life for 168hrs under normal temperature.

4、Storage

4.1. Don't open the moisture proof bag before ready to use the LEDs.

4.2. The LEDs should be kept at 30℃ or less and 60%RH or less before opening the package. The max. storage period before opening the package is 1 year.

4.3. After opening the package, the LEDs should be kept at 30-35%RH or less, and it should be used within 3 days. If the LEDs should be kept at 30-35%RH or more, and it should be used within 4 hours.

4.4. If the LEDs be kept over the conditions of 20%, baking is required before mounting. Baking condition as below: 70±5℃ for 12 hrs for bulk goods, 105±5℃ for 1 hrs for roll goods.

4.5. The environment have no acid, alkali, corrosive gas, intensively shake and high magnetic field.

5、Static

5.1.Static and Peak surge voltage can destroy LED, Avoiding Instantaneous voltage when turn on or turn off the lights.

5.2. Please wear Anti-static wrist band, Anti-static glove, Anti-static shoes in the course of operation, and the equipment must be grounded.

6、Test

6.1. Customer must apply the current limiting resistor in the circuit so as to drive the LEDs within the rated current. Otherwise slight voltage shift maybe will cause big current change and burn out will happen.

6.2. Also, caution should be taken not to overload the LEDs with instantaneous high voltage at the turning ON and OFF of the circuit. Otherwise, The LEDs will be destroyed, testing methods as follows:

6.3. The reverse voltage mustn't exceed 5v when lighting on or testing the LED, otherwise,The LEDs will be damaged.

7、Else

Copyright© 2025 Orient Corporation.

Radiant color of LEDs have a little change with the current, recommended that LED is used in series and resistance, when lighting, please don't see directly radiant surface of LED, otherwise LED will burn eyes.